SECTION J

THE STEERING GEAR

THE MORRIS MINOR (Series MM and Series II)
STEERING GEAR COMPONENTS

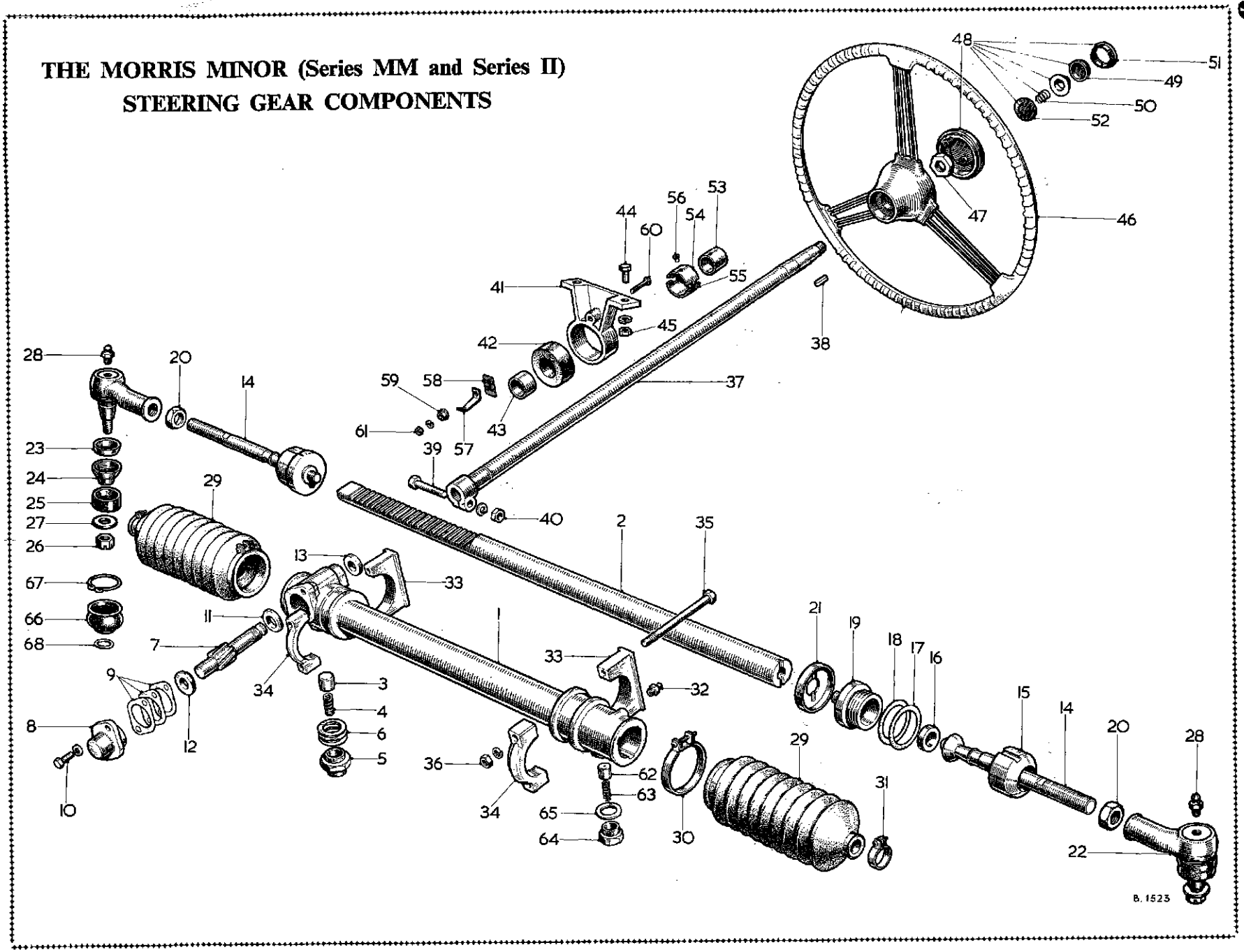

KEY TO THE MORRIS MINOR (Series MM and Series II)
STEERING GEAR COMPONENTS

No.	*Description*
1.	Rack housing.
2.	Rack.
3.	Damper pad—rack.
4.	Spring—rack damper pad.
5.	Housing—rack damper pad.
6.	Shim—rack damper housing.
7.	Pinion—steering.
8.	Tail bearing—pinion.
9.	Shim—tail bearing—·003 in. (·08 mm.) and ·005 in. (·13 mm.).
10.	Bolt—bearing to rack housing.
11.	Thrust washer—top—pinion.
12.	Thrust washer—bottom—pinion.
13.	Seal—pinion.
14.	Tie-rod.
15.	Ball housing—female.
16.	Ball seat.
17.	Shim—ball seat—·003 in. (·08 mm.).
18.	Shim—ball seat—·005 in. (·13 mm.).
19.	Ball housing—male.
20.	Locknut—ball socket.
21.	Lock washer—ball housing—male.
22.	Ball socket assembly.
23.	Cap—inner—grease-retaining.
24.	Cap—outer—grease-retaining.
25.	Pressure ring—cap.
26.	Nut—slotted.
27.	Washer.
28.	Greaser—ball socket.
29.	Seal—rack to tie-rod.
30.	Clip—seal to rack housing.
31.	Clip—seal to tie-rod.
32.	Greaser—rack.
33.	Base—clamp—rack to toeboard.
34.	Cap—clamp—rack to toeboard.
35.	Bolt—clamp to toeboard.
36.	Nut—clamp to toeboard bolt.
37.	Column assembly.
38.	Key—steering-wheel to column.
39.	Bolt—column to pinion.
40.	Nut—column to pinion bolt.
41.	Support bracket—column.
42.	Sleeve—rubber.
43.	Bush.
44.	Bolt—support bracket to fascia.
45.	Nut—support bracket bolt.
46.	Steering-wheel.
47.	Nut—steering-wheel to column.
48.	Horn-push assembly.
49.	Button—horn-push.
50.	Spring—horn-push.
51.	Retainer—horn-push button.
52.	Contact base—horn-push.
53.	Slip-ring.
54.	Block—slip-ring—upper.
55.	Block—slip-ring—lower.
56.	Thimble—slip-ring.
57	Contact brush—slip-ring.
58.	Insulator—slip-ring.
59.	Sleeve—contact brush.
60.	Bolt—contact to column bracket.
61.	Nut—contact bolt.
62.	Pad—secondary damper.
63.	Spring—secondary damper pad.
64.	Housing—secondary damper pad
65.	Washer—housing.
66.	Boot—rubber.
67.	Clip—boot.
68.	Clip ring—boot.

NOTE.—Later models are fitted with an improved tie-rod assembly (Part No. 183379) which may be fitted to the original type of rack (Part No. 133254) by machining a counterbore in place of the countersink as indicated in the illustrations below.

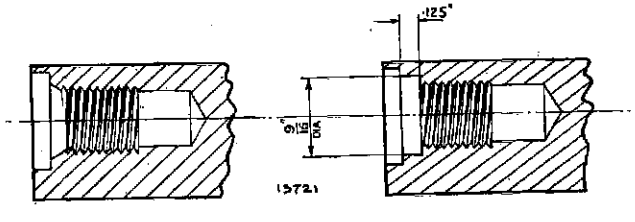

Original countersink *New counterbore*

GENERAL DESCRIPTION

The rack and pinion type steering gear is secured to the engine bulkhead immediately above the clutch housing. Tie-rods, operating the steering-arms, are attached to each end of the steering-rack by ball joints enclosed in rubber gaiters.

The steering-column engages the splined end of a helical-toothed pinion to which it is secured by a clamp bolt.

End-play of the pinion is eliminated by adjustment of the shims fitted beneath the pinion tail end bearing. A damper pad inserted beneath the steering-rack controls the backlash between the pinion and rack.

MAINTENANCE

A nipple provided at the left-hand end of the rack housing is accessible when the front carpet has been turned back. This nipple should be used to replenish the rack housing with Hypoid oil to Ref. B (page P.2) at the specified intervals. Avoid overfilling the steering gearbox, and keep the clips on the rubber gaiters fully tightened to prevent the oil escaping. No more than 10 strokes of a hand-type oil gun may be given.

Apply a grease gun, filled with grease to Ref. D (page P.2), to the nipple on each tie-rod ball joint at the specified intervals.

Section J.1

REMOVAL AND REPLACEMENT OF THE STEERING-WHEEL

Withdraw the connector from the negative battery terminal.

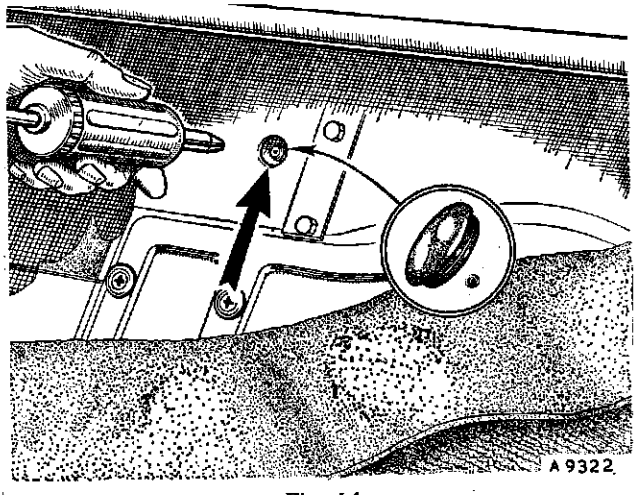

Fig. J.1

The location of the nipple for replenishing the steering gearbox with lubricant

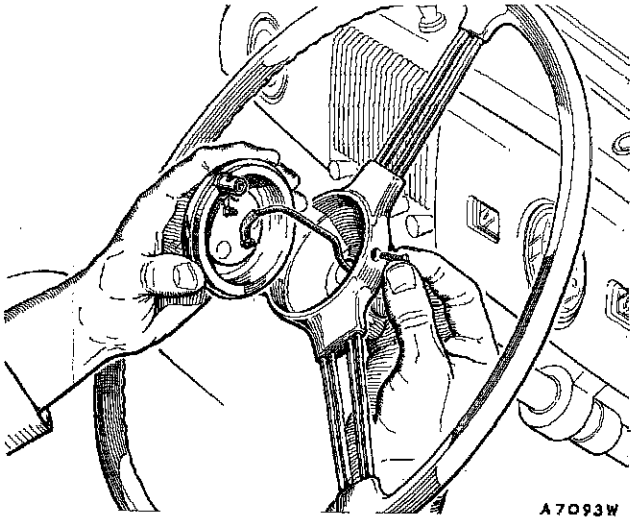

Fig. J.2

The horn wire is released by withdrawing the terminal screw in the wheel hub

Extract the chromium-plated screw from the bowl of the steering-wheel, lift out the horn-push assembly, and disconnect the horn wire.

Remove the steering-wheel retaining nut, using a $\frac{7}{8}$ in. box spanner. The steering-wheel can then be withdrawn with the aid of the steering-wheel extractor (Service tool 18G 310) (see Fig. J.3).

Reassembly is a reversal of the above procedure, but ensure that the steering-wheel locknut and the horn connections are fully tightened.

Section J.2

REMOVAL AND REPLACEMENT OF THE STEERING-COLUMN ASSEMBLY

Remove the connector from the negative battery terminal.

Disconnect the horn wire from the slip-ring contact brush terminal.

Remove the clamp nut and bolt from the splined lower end of the steering-column and slacken the two bolts securing the column bracket beneath the fascia panel.

Disengage the column assembly from the pinion shaft splines and lift from the car.

The method of replacing the steering-column assembly is a reversal of the above instructions, but it is essential that the splines on the steering-column and the pinion are engaged correctly. The slot in the steering-column

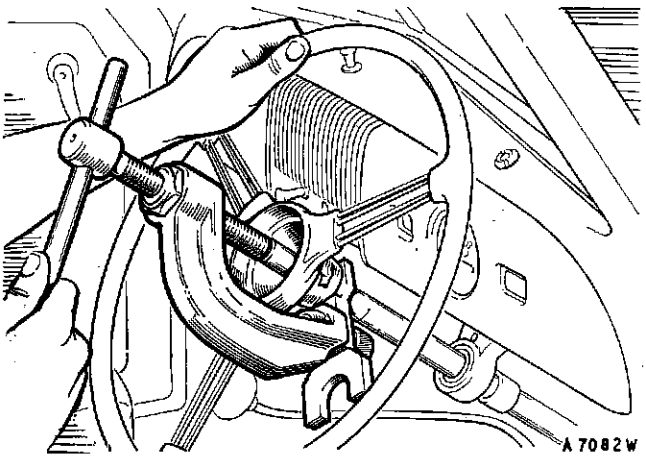

Fig. J.3

The special extractor, Part No. 18G 310, *in position for the withdrawal of the steering-wheel*

clamp must coincide with the mark on the end of the pinion. The mark is at bottom dead centre when the wheels are in their straight-ahead position.

Section J.3

REMOVAL AND REPLACEMENT OF THE STEERING-RACK ASSEMBLY

Remove the steering-column assembly as detailed in Section J.2.

Remove the split pins and slacken the ⅜ in. slotted nut on each tie-rod ball joint. **Do not remove the nut.** Tap the circumference of the steering-arm eye sharply and then place a support above the arm and drive the taper pin from its seating. The securing nut may now be removed and the tie-rod lifted from the arm. Note the position of the rubber washer.

Remove the front carpet and floorboard.

Extract the four ¼ in. bolts and spring washers and nuts securing the rack housing to the engine bulkhead and remove the brackets. The housing may now be withdrawn.

There will be no difficulty in replacing the steering-rack assembly provided the above instructions are carried out in the reverse order.

Section J.4

DISMANTLING THE STEERING GEAR

Unlock the ball end retaining nuts on the steering tie-rods and remove the ball end assemblies.

Release the gaiter clips from the rack housing and tie-rods and remove the rubber gaiters.

Unscrew the damper pad housing from the rack housing and withdraw it complete with pad, spring, and shims. Care must be taken not to lose any of the shims.

Extract the two bolts securing the pinion shaft tail bearing and remove the bearing and shims. Withdraw the pinion complete with the top thrust washer. The bottom thrust washer is trapped behind the rack teeth.

Secure the rack housing between suitable clamps in a vice and tap back the washers locking the tie-rod ball housings. Unscrew the ball joint caps with Service tool 18G 313 and remove the lock washers.

The steering-rack assembly may now be withdrawn from the housing.

Unscrew the ball seat housing from the ball joint caps with Service tool 18G 312.

The shims and ball seats are now free to fall out.

Section J.5

EXAMINING PARTS FOR WEAR

Thoroughly clean and examine for wear all parts of the pinion housing, shaft, and teeth. If badly worn, the pinion or housing, or both, should be renewed.

Fractures or hollows, or any roughness in the surfaces of the teeth, will render the rack or pinion unserviceable.

Clean off and examine the rubber gaiters. If they are damaged new ones **must** be fitted. Remove the nipple from the rack housing and the two on the ball joints. Check them by forcing lubricant through them to ensure that they are not blocked.

If the tie-rod inner ball housings or seats are badly worn they must be renewed and then adjusted as detailed in Section J.6. The outer ball joint is not adjustable and if worn must be replaced by a new assembly.

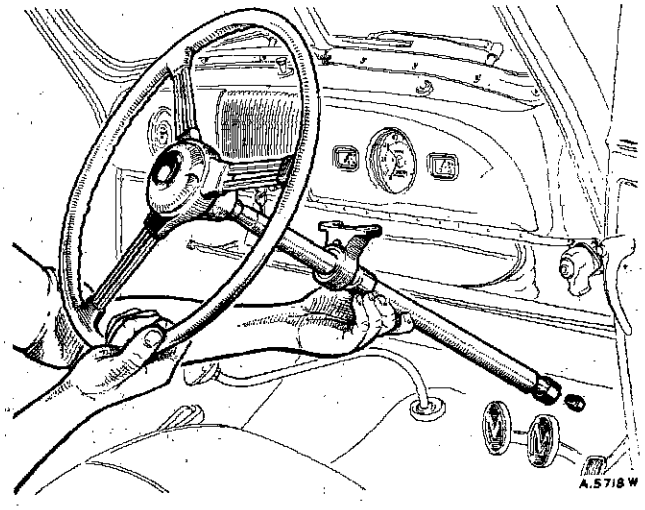

Fig. J.4

Withdrawing the steering-column assembly

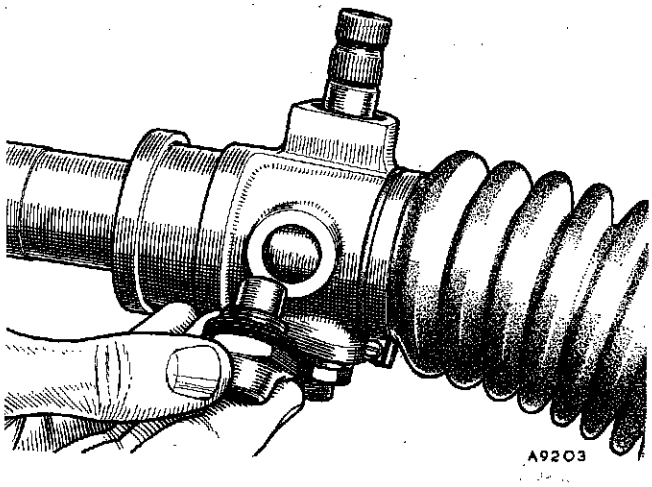

Fig. J.5

The steering-rack damper removed to show its construction and adjustment shims

Section J.6

REASSEMBLING THE STEERING GEAR

Fit a new lock washer to one end of the steering-rack, then replace and tighten the ball seat housing. Replace the shims and ball seat and, after inserting the ball end of the tie-rod, screw up the ball housing until it is right home. The ball must be a reasonably tight sliding fit without play. Adjustment is carried out by varying the thickness of the shims beneath the ball joint cap seating. The shims are provided in thicknesses of ·002 in., ·003 in., and ·005 in. (·05 mm., ·08 mm., and ·13 mm.). When correctly adjusted the ball housing must be locked in two places by the flange of the lock washer.

Insert the rack into its housing and refit and adjust the other ball seat in a similar manner.

Draw the rack through its housing until the middle tooth (No. 12 from either end) is in the centre of the pinion housing.

Place the thickest of the pinion thrust washers in position in the rack housing with its chamfered edge towards the rack. Replace the smaller thrust washer on the plain end of the pinion shaft with the chamfered edge towards the pinion teeth.

Replace the pinion, engaging the trough between two teeth, which is in line with the mark on the splined end of the pinion shaft, with the centre tooth of the rack. The correct engagement of the rack and pinion is essential if the steering-wheel position is not to be affected.

Replace the shims and the pinion tail bearing. Bolt them into position and check the end-play of the pinion shaft, which should be between ·002 and ·005 in. (·05 and ·13 mm.). If necessary, the shims must be adjusted to give this degree of play.

Check that both the rods are of equal length by measuring the distance from the spanner flats to the ball joint locknuts.

Refit the rubber gaiters and clips.

Replace the ball end locknuts and joint assemblies in their approximate original positions.

To adjust the rack damper the plunger must be replaced in the cap and screwed into position without the plunger spring or shims until it is just possible to rotate the pinion shaft by drawing the rack through its housing. A feeler gauge is then used to measure the clearance between the hexagon of the plunger cap and its seating on the rack housing. To this figure must be added an additional clearance of ·002 to ·005 in. (·05 to ·13 mm.) to arrive at the correct thickness of shims which must be placed beneath the damper cap. The shims are ·003 in. (·08 mm.) thick.

Remove the damper cap and plunger. Insert the spring beneath the plunger and replace and tighten the assembly with the requisite number of ·003 in. (·08 mm.) shims as defined in the previous paragraph.

Fit a new pinion shaft felt seal, and pump approximately ½ pint (·6 U.S. pint, ·28 litre) of Hypoid oil to Ref. B (page P.2) into the rack housing through the nipple provided.

Section J.7

CHECKING AND SETTING WHEEL ALIGNMENT

When correctly adjusted the front wheels should toe in towards each other to the extent of $\frac{3}{32}$ in. (2·5 mm.). To carry out any necessary adjustment first inflate the

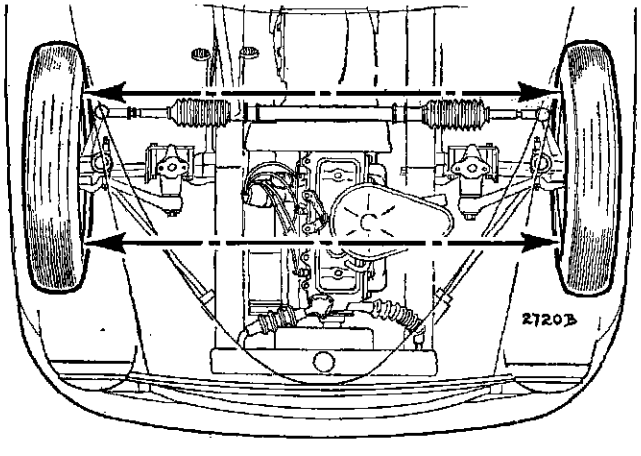

Fig. J.6

The alignment of the front wheels should be such that they toe in towards each other to the extent of $\frac{3}{32}$ in. (2·5 mm.) when in the straight-ahead position

tyres to the standard pressure of 22 lb./sq. in. (1·6 kg./cm.^{2}).

Turn the wheels to their straight-ahead position and position the pointers of a set of alignment trammels to the wheel centre height, or make use of an alignment fixture if one is available.

Place the trammel at the front of the front wheels and adjust it longitudinally so that both pointers register against the inside rim of each wheel. Mark the position of the pointers on each wheel rim with chalk, withdraw the trammel, and push the car forward so that the wheels make exactly half a revolution.

Move the trammel to the rear of the wheels so that one pointer registers with the chalk-mark on one of the wheels. For the alignment to be correct the other pointer should be $\frac{3}{32}$ in. (2·5 mm.) from the rim of the other wheel.

Should it not be so, adjust the track by slackening the locknut of both tie-rod ball joints and the clips securing the rubber gaiters to the tie-rods, then rotate each tie-rod equally in the necessary direction. Both tie-rods have right-hand threads and should be rotated with a spanner applied to the flats provided.

When making adjustments remember that they are doubled, that is to say, that adjustment of the rim in one direction makes a similar increase of the opposite portion of the rim in the other direction.

Whenever possible, one of the special alignment devices now on the market should be employed to set the front wheels.

IMPORTANT.—Make sure to retighten the locknuts and rubber gaiter clips and particularly that the top surfaces of the ball joints are in the same plane.

When the track is correctly adjusted and the wheels are in the straight-ahead position the slot in the steering-column clamp must be at the bottom dead centre position and the tie-rods adjusted to equal lengths. This can be checked by measuring the distance from the spanner flats to the ball joint locknuts.

Section J.8

MODIFICATION

It should be noted that cars subsequent to No. SMM/29862 (Home) and SMM/11958 (Export) are fitted with steering levers having a taper of larger dimensions and retained with a $\frac{1}{2}$ in. B.S.F. nut in place of the $\frac{7}{16}$ in. B.S.F. nut originally fitted.

Section J.9

RUBBER SEAL STEERING JOINTS

On later cars a modified ball socket assembly (Part No. 185163) is fitted. The later type differs from the older type in that it has a rubber shroud secured by a clip at either end to retain the socket grease and act as a dirt excluder. On the earlier type these functions are performed by two metal cups and a washer.

Section J.10

ELIMINATING STEERING-RACK RATTLE

In cases where steering-rack rattle has developed due to the clearance between the rack and its housing increasing in use to an extent beyond normal it is an advantage to fit an additional damping pad at the support end of the rack housing.

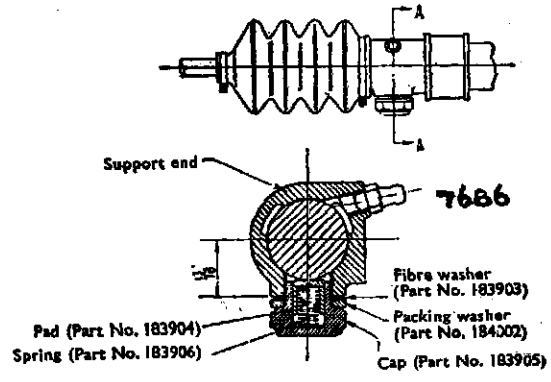

Fig. J.7

The assembly of the additional damper on the steering-rack housing

To do this, first remove the steering-rack assembly from the vehicle and dismantle the rack from its housing.

Drill the blank boss at the support end of the rack housing $\frac{39}{64}$ in. (15·5 mm.) and tap $\frac{11}{16}$ in. × 18 t.p.i. (Whitworth form). Face down the boss, square with the thread, to $\frac{13}{16}$ in. (20·6 mm.) from the centre of the rack housing.

Reassemble the rack in the housing and fit a pressure pad (Part No. 183904), spring (Part No. 183906), fibre washer (Part No. 183903), packing washer (Part No. 184002), and cap (Part No. 183905) as shown in Fig. J.7.

Section J.11

MODIFIED STEERING BALL SOCKETS

From Car No. 246771 onwards it should be noted that modified steering ball sockets (new Part No. ACA 6001) are fitted having $\frac{7}{16}$ in. UNF. tapered studs and $\frac{5}{16}$ in. UNF. straight greaser nipples (Part No. UHN 105). The thread on the tie-rod end remains B.S.F., however.

SECTION JJ

THE STEERING GEAR
OF THE MORRIS MINOR 1000

THE MORRIS MINOR 1000
STEERING-COLUMN ASSEMBLY (Earlier Models)

No.	*Description*
1.	Column—steering.
2.	Tube assembly—outer.
3.	Bush—felt.
4.	Bracket—column support.
5.	Clamp—bracket.
6.	Packing strip—clamp.
7.	Screw—clamp.
8.	Nut—clamp screw.
9.	Spring washer—screw.
10.	Wheel—steering.
11.	Nut—wheel.

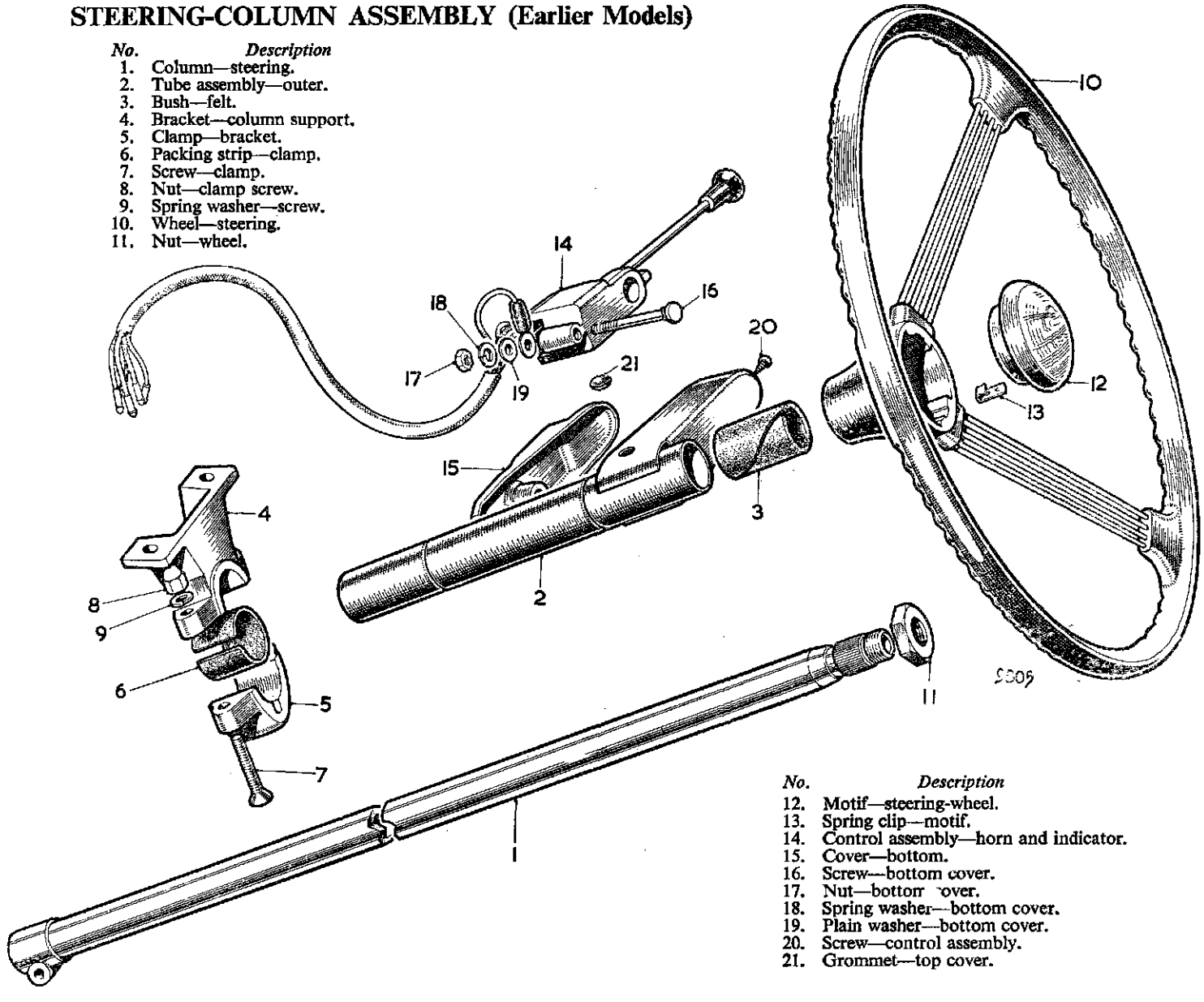

No.	*Description*
12.	Motif—steering-wheel.
13.	Spring clip—motif.
14.	Control assembly—horn and indicator.
15.	Cover—bottom.
16.	Screw—bottom cover.
17.	Nut—bottom cover.
18.	Spring washer—bottom cover.
19.	Plain washer—bottom cover.
20.	Screw—control assembly.
21.	Grommet—top cover.

GENERAL DESCRIPTION

The rack and pinion steering fitted to the Morris Minor 1000 is the same as that fitted to the Morris Minor (Series II), with the exception of the steering-column assembly. The instructions for servicing are given in Section J with Section JJ.1 replacing Sections J.1 and J.2.

Section JJ.1

REMOVAL AND REPLACEMENT OF THE STEERING-COLUMN ASSEMBLY

Disconnect the positive battery terminal.

Prise off the steering-wheel motif: this is retained by three spring clips. Remove the steering-wheel retaining nut and withdraw the steering-wheel with the steering-wheel extractor, Service tool 18G 310.

Disconnect the five trafficator and horn control wires from the snap connectors beneath the fascia. Remove the screw from the end of the trafficator and horn control assembly and the nut, spring washer, flat washer, and earth wire terminal from the bottom cover bolt and withdraw the bolt, thus releasing the control assembly from the steering-column. Release the control cable from the steering-column bracket clamp.

Remove the clamp nut and bolt from the bottom of the steering-column and the two cap nuts and screws from the column support bracket and clamp beneath the fascia, and remove the clamp.

Disengage the column assembly from the pinion splines and lift from the car.

The method of replacing the steering assembly is a reversal of the above instructions, but the slot in the steering-column clamp **must** coincide with the mark on the end of the pinion. The mark is at bottom dead centre when the wheels are in their straight-ahead position.

Section JJ.2

MODIFIED STEERING-COLUMN ASSEMBLY

Later cars are fitted with a modified steering-column assembly having the horn-push mounted in the centre of the steering-wheel. The manually returned direction indicator switch and combined horn-push is replaced by a direction indicator switch of self-cancelling type with a warning lamp in the end of the operating lever.

The steering-column and wheel may be interchanged as a complete assembly with the earlier column and wheel. The new horn-push and self-cancelling direction indicator switch cannot readily be fitted to earlier assemblies.

This modification is incorporated on cars from the following numbers: 704254 (Traveller), 705622 (Two-door), 705224 (Four-door).

The procedure for removing and replacing the new components is given as follows.

Steering-column assembly

Disconnect the positive battery terminal.

Disconnect the horn and direction indicator wires at the snap connectors beneath the fascia and draw them through the grommeted hole in the fascia.

In order to preclude the possibility of disrupting the spring contact blade in the direction indicator switch by relative movement between the column and outer tube it is advisable to remove the switch (as detailed under **'Direction indicator switch'** below) before freeing either the column or the outer tube.

Remove the clamp nut and bolt from the splined lower end of the column. Remove the two domed nuts and screws from the column support bracket and clamp below the fascia, and remove the clamp.

Disengage the column assembly from the pinion splines and lift it from the car.

When replacing the column assembly reverse the instructions given above and observe the precaution detailed in Section JJ.1.

Steering-wheel

Disconnect the positive battery terminal.

Remove the horn-push from the centre of the steering-wheel by taking out the chromed countersunk screw from the hub of the wheel. Remove the small circlip and plain washer from the terminal on the horn wire and then take away the rubber ferrule with its spring and washer. Remove the steering-wheel retaining nut, using Service tool 18G 512 or a suitable box spanner. Carefully push the horn wire and terminal inside the steering-column to prevent them being damaged by the steering-wheel extractor. Withdraw the steering-wheel, using the extractor, Service tool 18G 310.

Replacement is a reversal of the above procedure. Ensure that the steering-wheel retaining nut is tight.

Direction indicator switch

Remove the steering-wheel as detailed above.

Disconnect the horn and direction indicator wires at the snap connectors beneath the fascia and draw them through the grommeted hole in the fascia. Remove the column support bracket clamp below the fascia to release the wires.

Remove the three chromed screws from the switch plastic cover. Pull the cover upwards off the switch over the end of the steering-column. Extract the two screws securing the switch clamp to the column outer tube and remove the switch assembly.

Reassembly is a reversal of the above sequence. Make certain that the switch is located on the column outer tube so that the cancelling mechanism works correctly. Position the plastic cover so that it does not foul the switch operating lever.